产品规格书

Specifcation of products

产品名称:三相整流桥模块

产品型号:MDS150A-T13

浙江世菱半导体有限公司
ZHEJIANG SHILING SEMICONDUCTOR CO.,LTD.

地址：浙江省 丽水市 莲都区
电话：（0578）3615066
邮编： 323000
E-mail:smrshiling12@163.com
Http//www.smrshiling.com

拟制	审核	核准
蓝少波	陈一凡	曹剑龙

版本号：02 更新日期：2026.5

SYMBOL	CHARACTERISTIC	TEST CONDI TIONS	T_j(℃)	VALUE			UNIT
				Min	Type	Max	
I_O	DC output current	Three-phase full wave rectifying circuit, T_C=100℃	150			150	A
V_{RRM}	Repetitive peak reverse voltage	V_{RRM} tp=10ms V_{RsM}= V_{DRM}&V_{RRM}+200V	150	600		2200	V
I_{RRM}	Repetitive peak current	at V_{RRM}	150			12	mA
I_{FSM}	Surge for ward current	10ms half sine wave V_R=0.6V_{RRM}	150			1.5	KA
I^2t	I^2T for fusing coordination					11.4	A^2s*10^3
V_{FO}	Threshold voltage		150			0.80	V
r_F	For ward slop resistance					2.5	mΩ
V_{FM}	Peak for ward voltage	I_{FM}=150A	25			1.10	V
$R_{th(j-c)}$	Thermal resistance Junction to heatsink	Single side cooled				0.240	℃ /W
V_{iso}	Isolation voltage	50Hz,R.M.S,t=1min,I_{iso}:1mA(max)		2500			V
F_m	Terminal connection torque(M5)				4.0		N.m
	Mounting torque(M6)				5.0		N.m
T_{stg}	Stored temperature			-40		125	℃
W_t	Weight						g
Outline							

OUTLINE DRAWING & CIRCUIT DIAGRAM

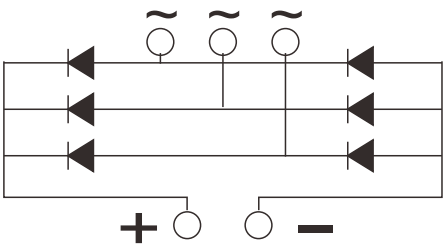

Rating and Characteristic

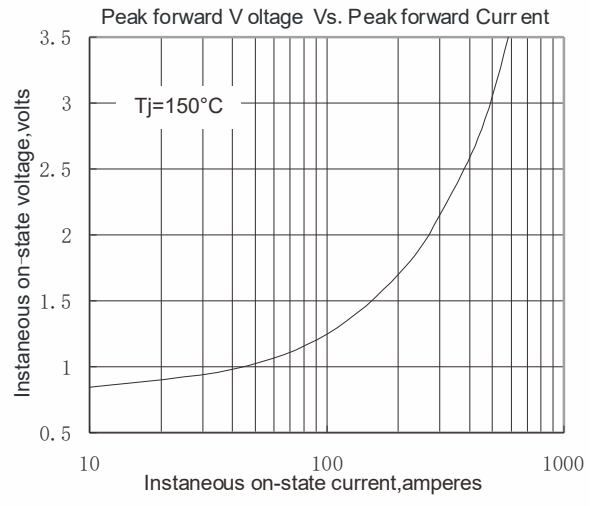

Fig.1

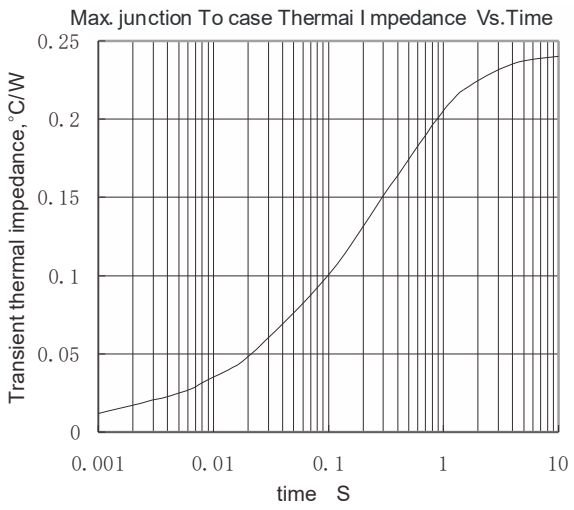

Fig.2

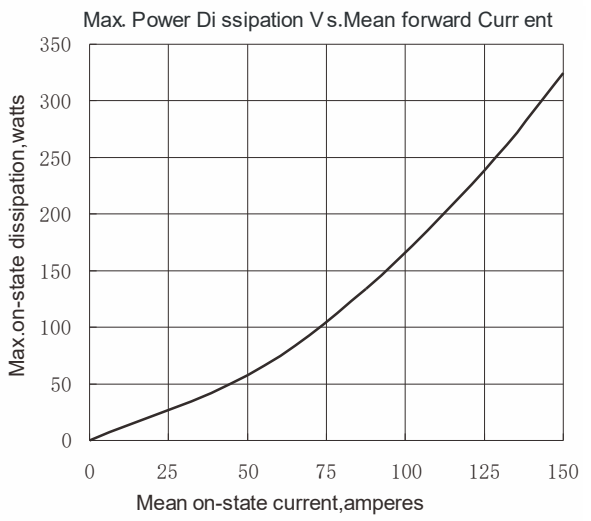

Fig.3

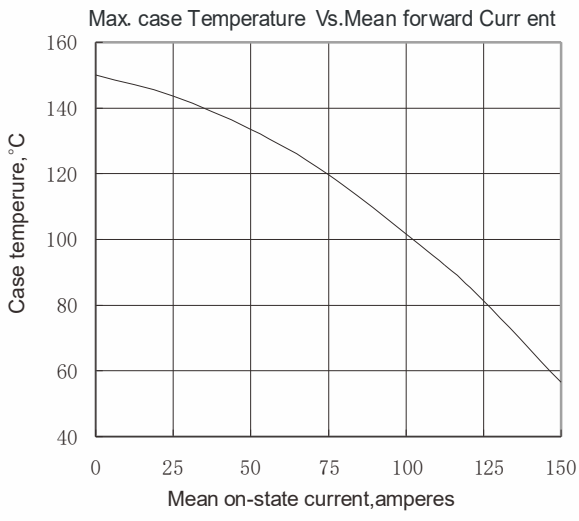

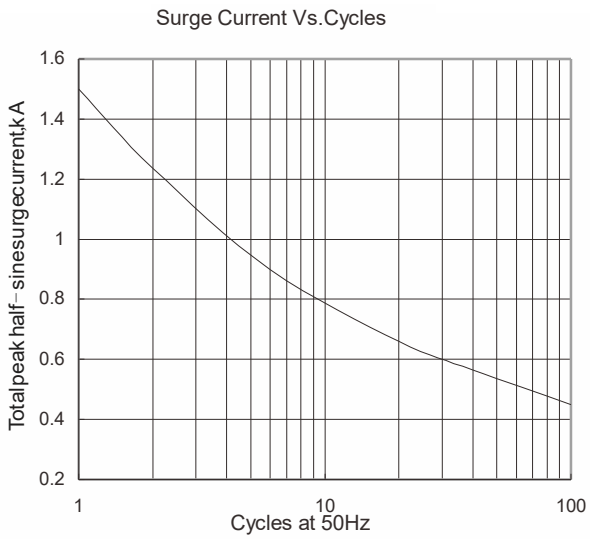

Fig.5

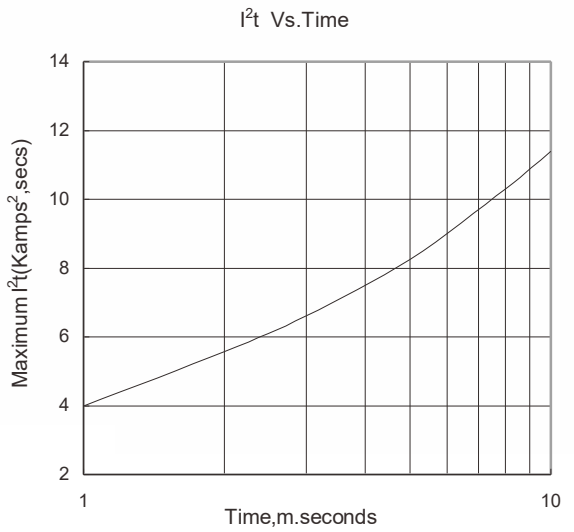

Fig.6

Outside Dimension

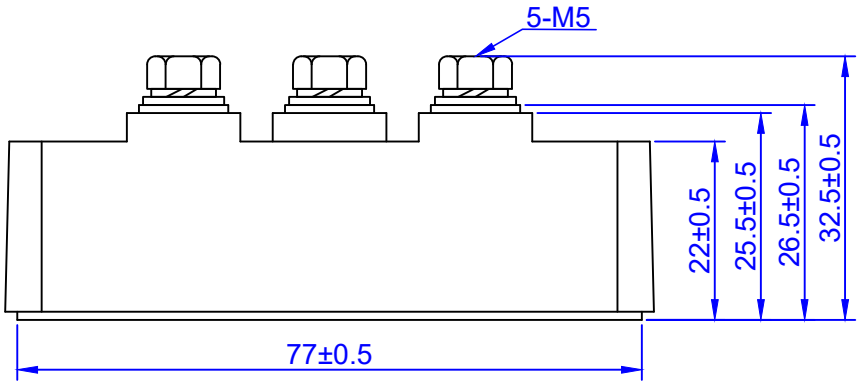

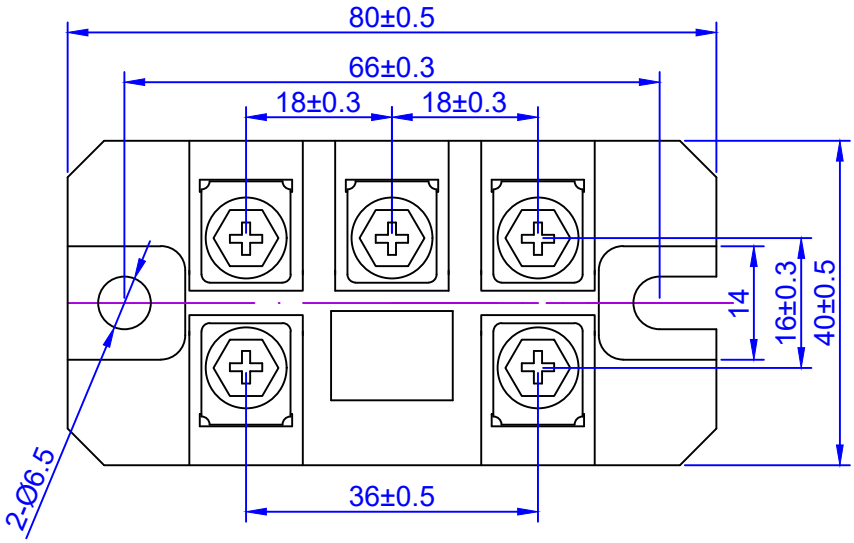

Dimensions (mm)